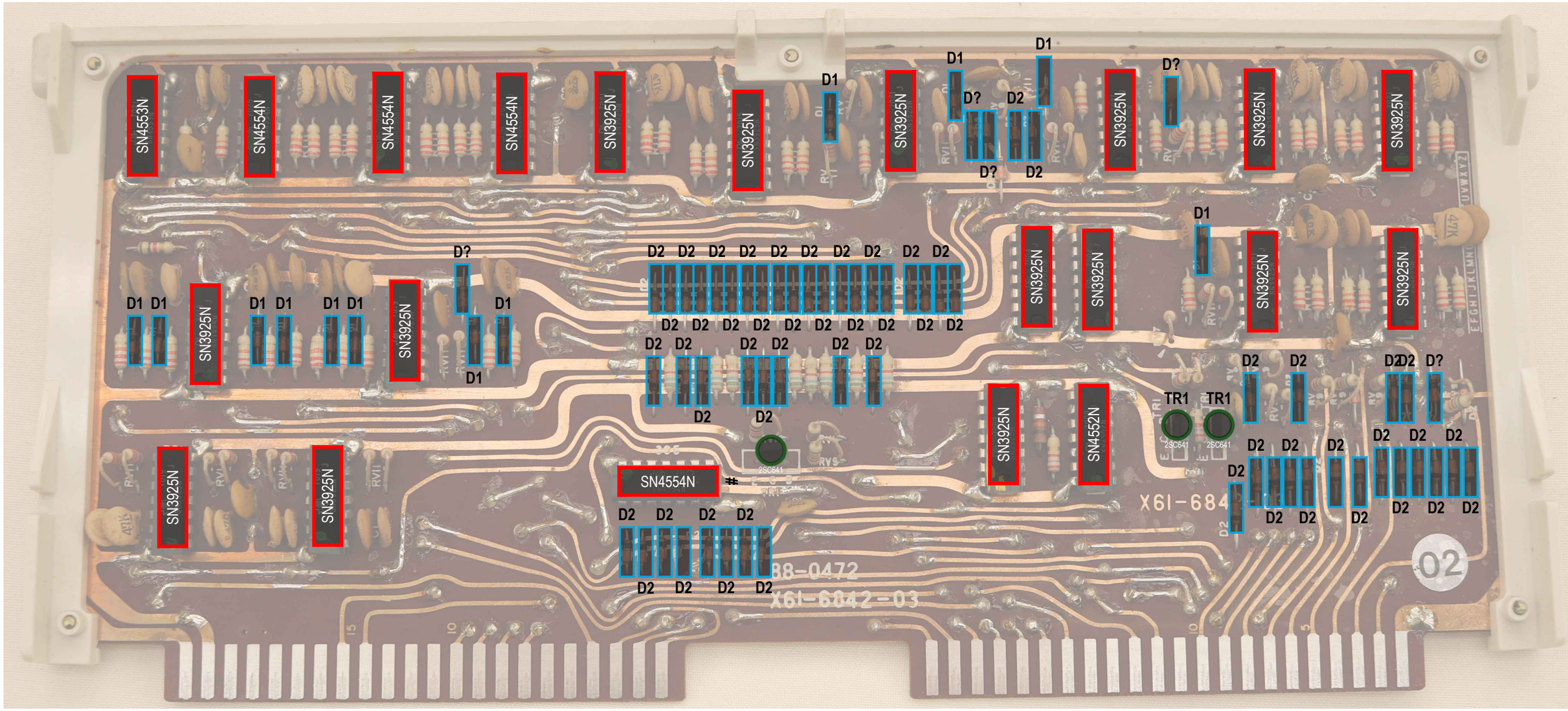

Left-click the component to open the associated CALCUSEUM webpage

BOM

Description	Brand	Type	Count
Diode			72
IC	TEXAS INSTRUMENTS	SN3925N	15
IC	TEXAS INSTRUMENTS	SN4552N	1
IC	TEXAS INSTRUMENTS	SN4553N	1
IC	TEXAS INSTRUMENTS	SN4554N	4
Transistor	HITACHI	2SC641	3
			96