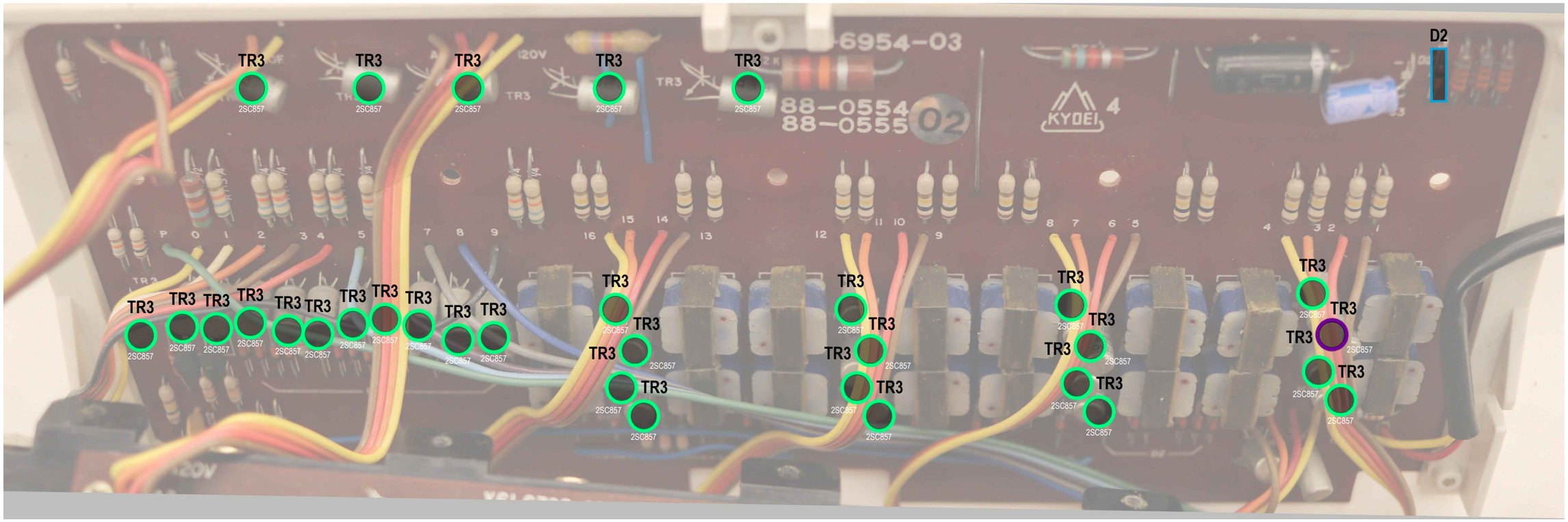

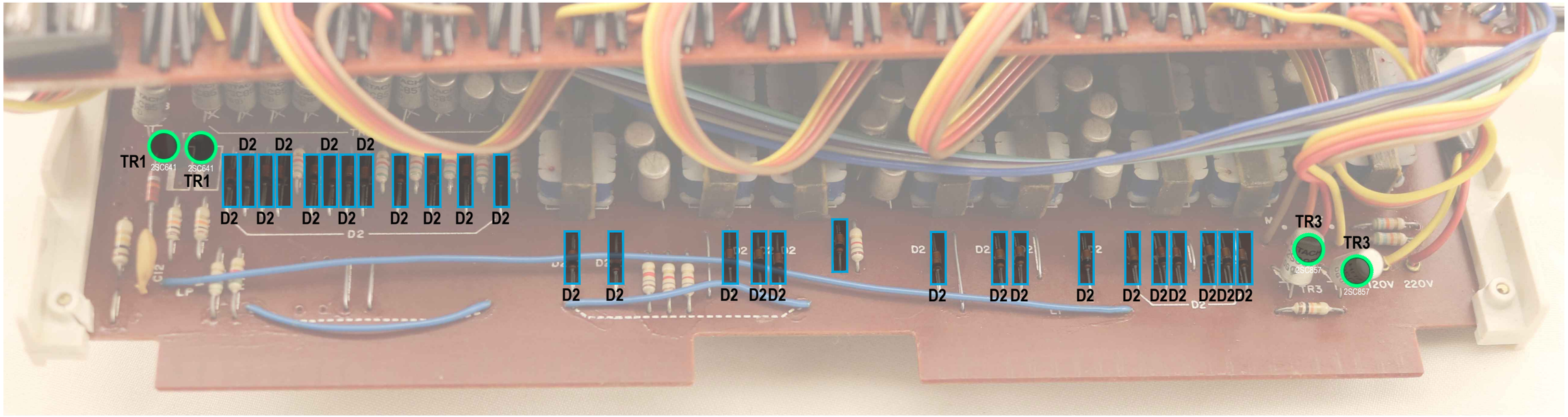

Left-click the component to open the associated CALCUSEUM webpage

BOM

Description	Brand	Type	Count
Diode			29
Transistor	HITACHI	2SC641	2
Transistor	HITACHI	2SC857	34
			65