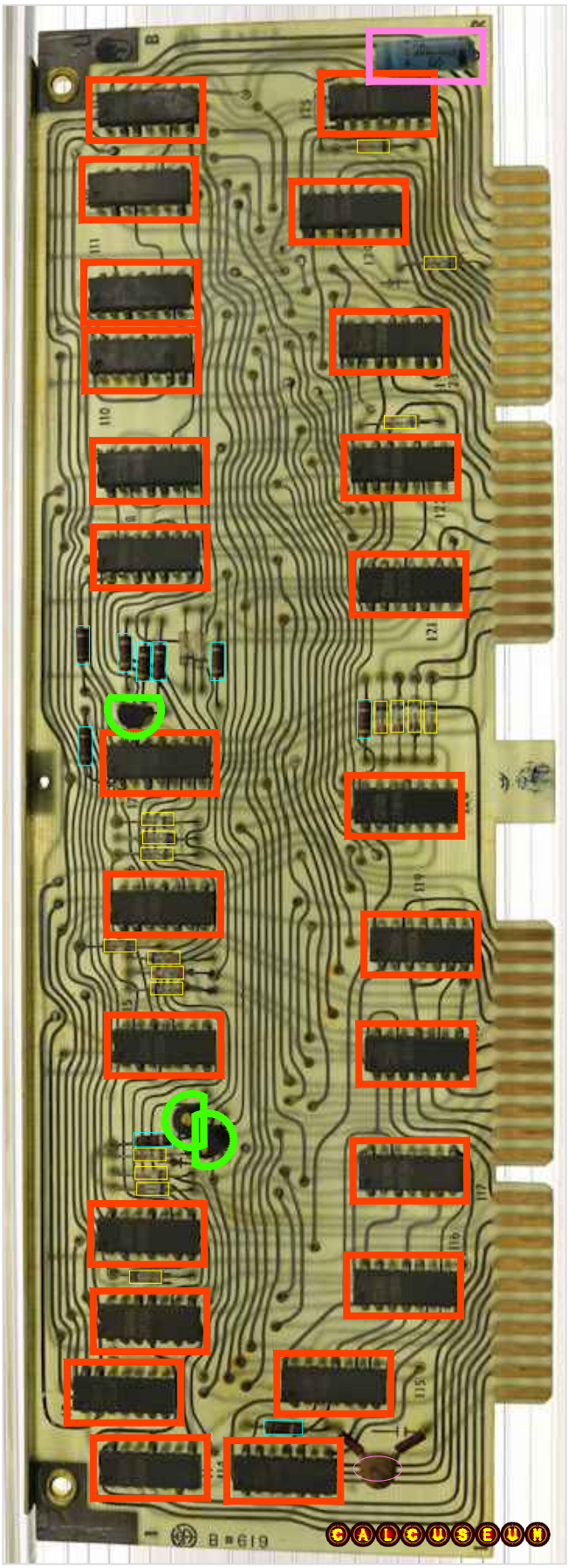

Hint: Hover on Colored Outlines to reach Hyperlinks,
Manipulate Layers for alternative Visualisation.

Components Overview		
Name	Type	Count
Component_Capacitor_Elco		1
Component_Capacitor_Tantalum		1
Component_Diode		18
Component_IC_DIL	GENERAL INSTRUMENT: ST616A	1
Component_IC_DIL	GENERAL INSTRUMENT: ST629A	1
Component_IC_DIL	GENERAL INSTRUMENT: ST680A	15
Component_IC_DIL	GENERAL INSTRUMENT: ST670A	8
Component_Resistor		9
Component_Transistor_TO92	MITSUBISHI: C709	3
		57

Click Here to Visit the Bonus Page